Protero

8722 E Research Center Rd.
New Hope, MN 55128
Ph: 763-535-4038
Fax: 763-535-4633

DUMP N' GO
MODEL RC 212
JOHN DEERE

RC 212 shown on John Deere Model 115
Fits models: 102, 105, 125, 135, 145, 155C, & 190C

ASSEMBLY INSTRUCTIONS AND PARTS LISTS

SAFETY

Congratulations on purchase of your Protero RC 212 Dump N Go grass catcher!
You will stay on your tractor seat and enjoy a beautiful lawn for a long time to come.

Please read and be familiar with the operator's manuals that came with your mower and grass catcher. These manuals provide information for the safest and most effective use of your equipment. If you do not have operator's manuals for your mower and for your collection system, please contact your dealer to obtain them.

The Dump N Go catcher simply replaces the bag-type catcher in your collection system; so all safety guidelines in your operator's manual for the collection system apply to your Dump N Go as well. Do not operate, nor allow others to operate your Dump N Go catcher without thorough review and training of these important safety guidelines.

For your convenience, here are some basic safety guidelines that your operator's manuals will cover:

Before you operate your material collection system:

- Understand the machine safety labels, and pay attention to the symbols for DANGER, WARNING, and CAUTION.
- WARNING: Objects may be thrown from mower.
- Do not open catcher while blades are turning.
- Shut off engine if getting off mower to inspect catcher.
- Operate mower with complete bagging attachment in place
- If necessary, use proper front counterweight. Remove counterweight when the material collection system is removed.
- Hopper extends beyond vehicle. Be aware of surrounding objects when making short turns.
- Do not operate material collection system unless entire grass catcher is fastened in place with the hopper cover securely latched.
- Do not let anyone ride on the mower or material collection system. Riders are subject to injury such as being struck by foreign objects or being thrown off. Riders may obstruct the operator's view and cause a collision.

Before you inspect catcher or unplug chute:

- Stop mower.
- Disengage mower PTO.
- Stop engine.

Before you back up:

- Stop machine.
- Look behind hopper for children or pets.

Operate safely on slopes:

- Dump catcher when half full.
- Do not operate on steep slopes.
- Before you turn, slow down.
- Avoid holes, rocks, and roots.
- Mow up and down - not across slopes.
- Do not park mower with material collection system on slopes.

Parking Safely:

- Stop machine on a level surface, not a slope.
- Disengage PTO.
- Wear close fitting clothing and safety equipment appropriate for the job.
- Always wear safety goggles or safety glasses with side shields when operating the machine.
- Wear a suitable protective device such as earplugs. Loud noise can cause impairment or loss of hearing.
- Do not wear radio or music headphones. Safe service and operation requires your full attention.

Practice Safe Maintenance:

- Understand service procedures before doing work. Keep area clean and dry.
- Never service or adjust any part of the collection system while the mower is moving. Keep safety devices in place and in working condition. Keep hardware tight.
- Keep all parts in good condition and properly installed. Fix damage immediately. Replace worn or broken parts. Remove any buildup of debris.
- Unauthorized modifications to the collection system may impair its function and safety. Do not tamper with its original design.

INCLUDED PARTS AND HARDWARE:

TOOLS NEEDED:

- Phillips head screwdriver
- 7/16” wrench (7/16” socket and ratchet suggested)
- Two, 9/16” wrenches (9/16” sockets and ratchets suggested)
- Pliers

PARTS:

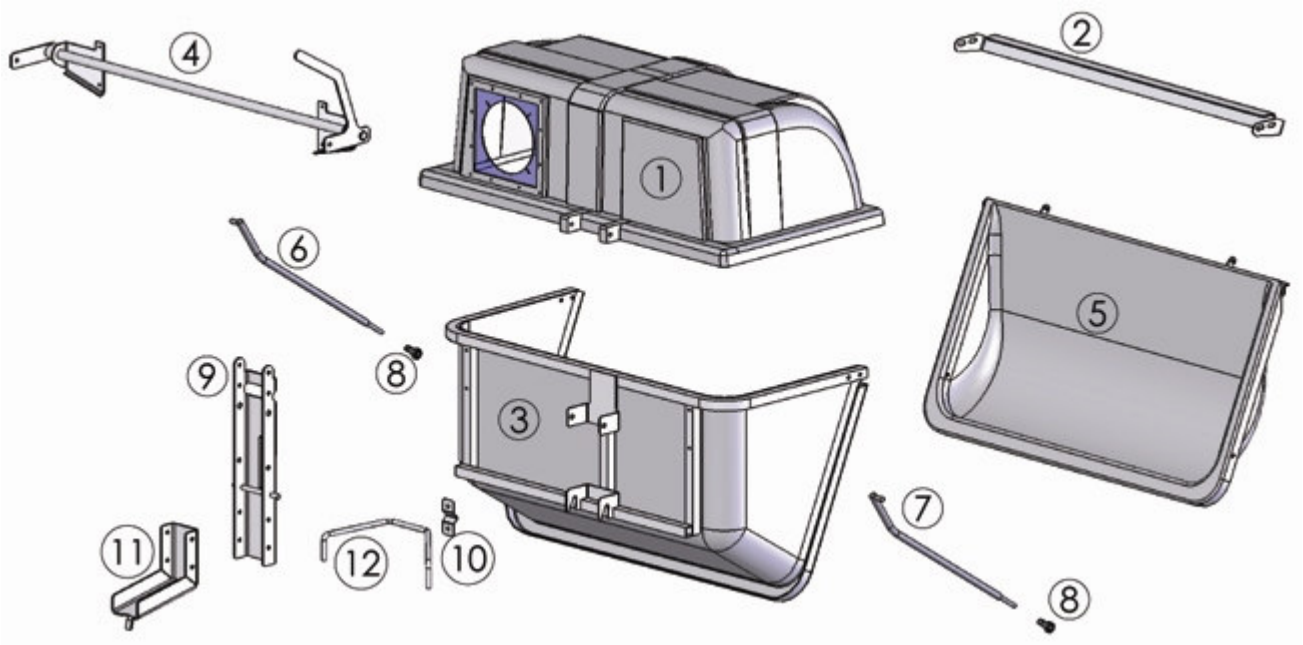

ITEM #	PART #	DESCRIPTION	QUANTITY
1	212110	212 HOOD ASSEMBLY	1
2	212140	CATCHER HINGE ASSEMBLY	1
3	212150	RC 212 CATCHER BODY ASSEMBLY	1
4	212155	DUMP LEVER ASSEMBLY	1
5	212160	DOOR ASSEMBLY	1
6	212171	HINGE ROD RIGHT	1
7	212172	HINGE ROD LEFT	1
8	212175	3/8” BALL JOINT ROD END	2
9	212176	CHANNEL MOUNT ASSEMBLY	1
10	212310	212 WIRE CLIP	1
11	212311	CHANNEL MOUNT – JD 100 RC	1
12	212312	SUPPORT WIRE – JD 100 RC SERIES	1

HARDWARE INCLUDED:

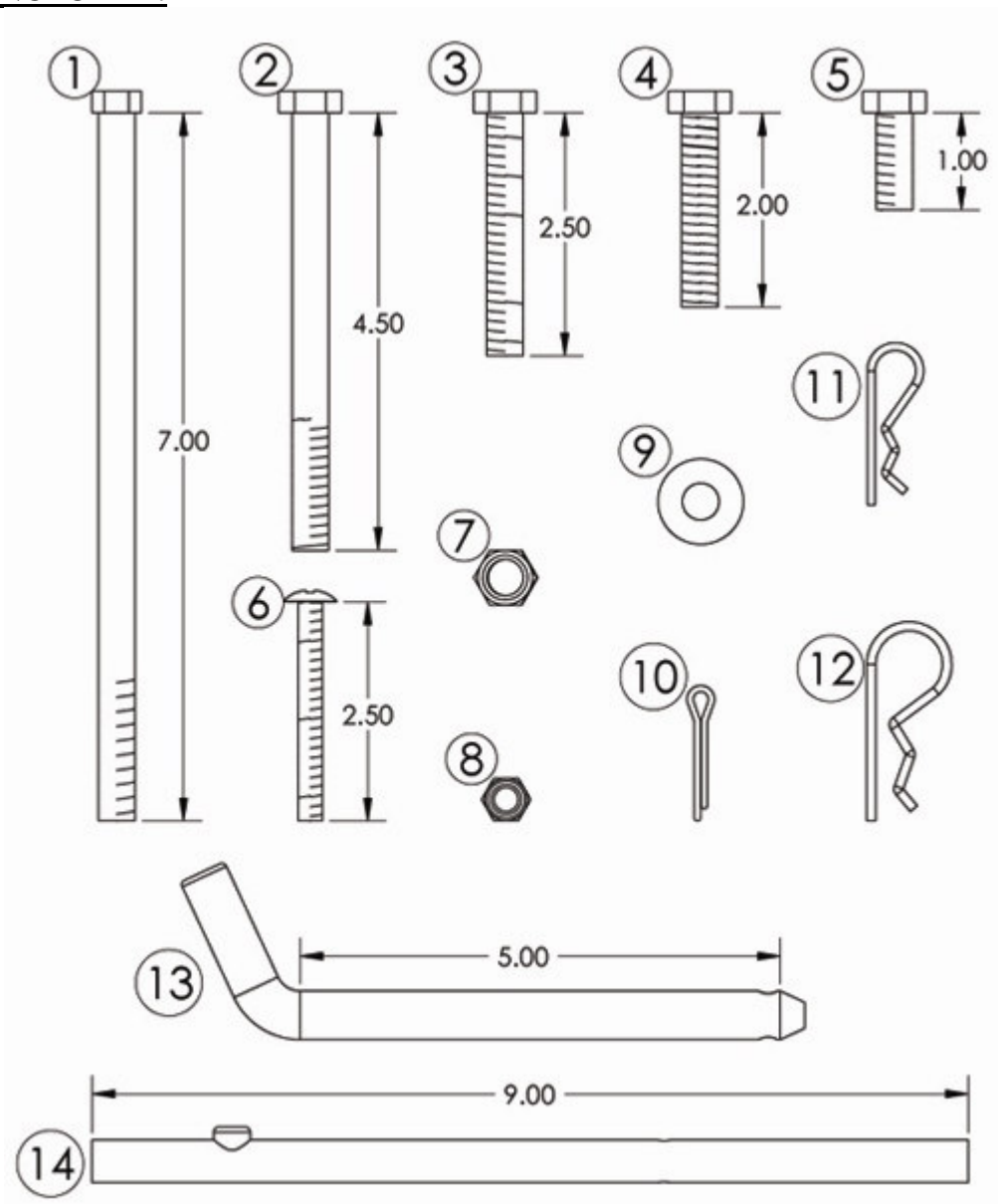

ITEM #	PART #	DESCRIPTION	QUANTITY
1	BOLT HH 38 7	3/8” x 7” HEX HEAD BOLT	1
2	BOLT HH 38 412	3/8” x 4 ½” HEX HEAD BOLT	2
3	BOLT HH 38 212	3/8” x 2 ½” HEX HEAD BOLT	2
4	BOLT HH 38 2	3/8” x 2” HEX HEAD BOLT	4
5	BOLT HH 38 1	3/8” x 1” HEX HEAD BOLT	4
6	BOLT PT 14 212	1/4” x 2 ½” PHILLIPS TRUSS HEAD BOLT	4
7	NUT NYL 38	3/8” NYLOCK NUT	13
8	NUT NYL 14	1/4" NYLOCK NUT	4
9	WASHER 38	3/8” FLAT WASHER	20
10	COTP 125 1	COTTER PIN 1/8” x 1” ZINC	2
11	BP 233	BRIDGE PIN 0.930” x 1 1/8” ZINC	1
12	BP 228	BRIDGE PIN 0.930” X 2” ZINC	1
13	BNTP 12 5	BENT PIN ½” x 5” EFF HOLE ZINC	1
14	ROD 0.4375 9	7/16” CR ROD x 9”	1

ASSEMBLY:

STEP 1:

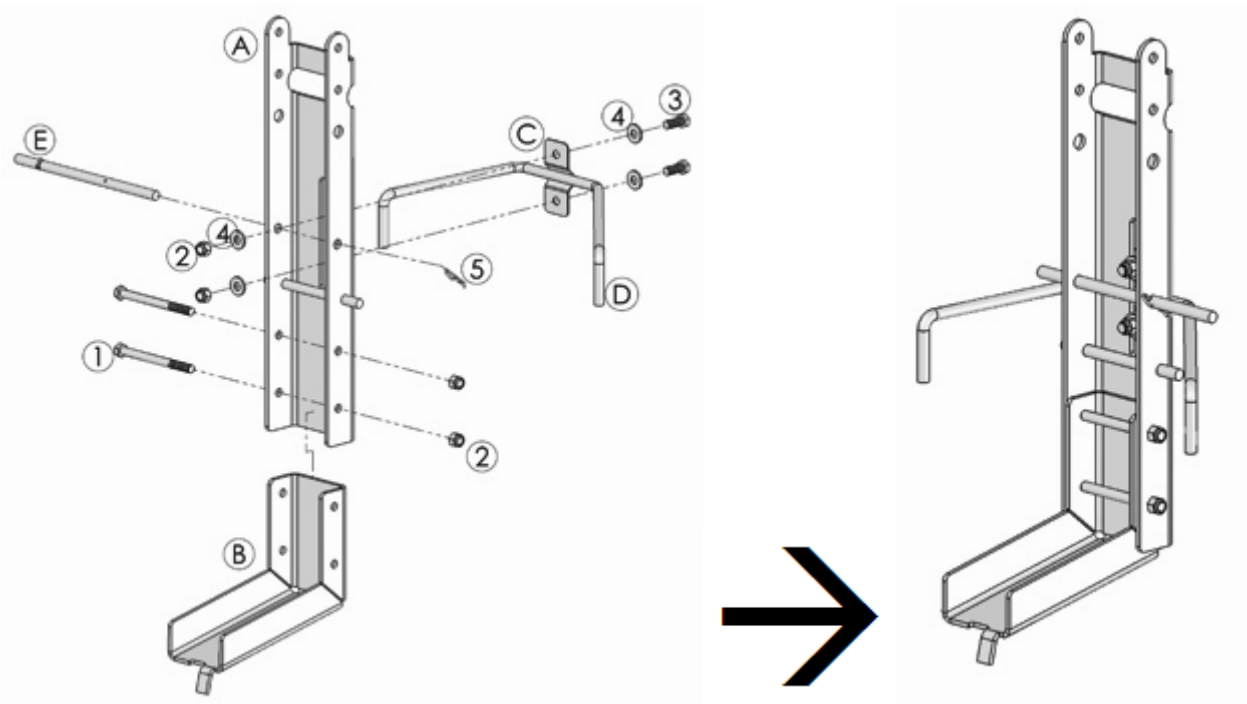

- Place part (B) into part (A) and insert two 4½" long, 3/8" diameter bolts (1) thru holes.
- Tighten both bolts (1) with two 3/8" nylock nuts (2).
- Place the support wire (D) in the groove of the wire clip (C). Place against back of part (A), lining up the two holes in (C) with the slot in (A).
- Insert two 1" long, 3/8" diameter bolts (3) with washers (4), thru the holes in (C).
- On the front side of (A), place a washer (4) on each bolt (3) coming out of the slot.
- Put on two 3/8" nylock nuts (2), but ***do not*** fully tighten.

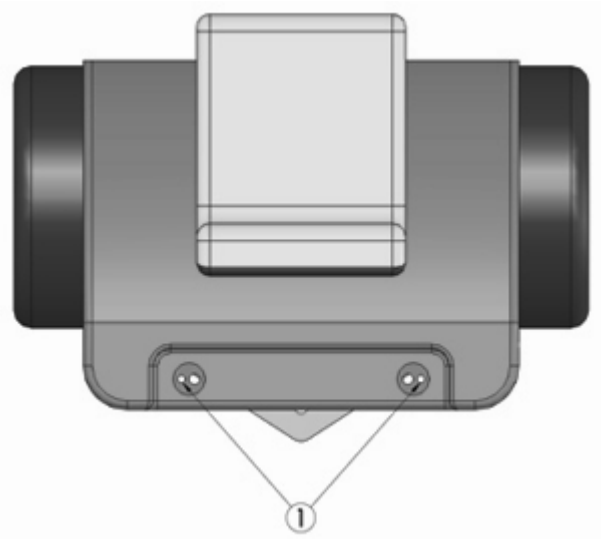

- Insert the straight support rod (E) thru the middle hole in (A). Make sure nub on (E) is on right side when visually facing rear of mower.
- Insert the small bridge pin (5) through the hole in the rod.
- The two ends of the support wire (D) will insert into the two ***smaller*** holes behind the seat of the mower.

Above figure is partial view of top rear of the mower.

STEP 2:

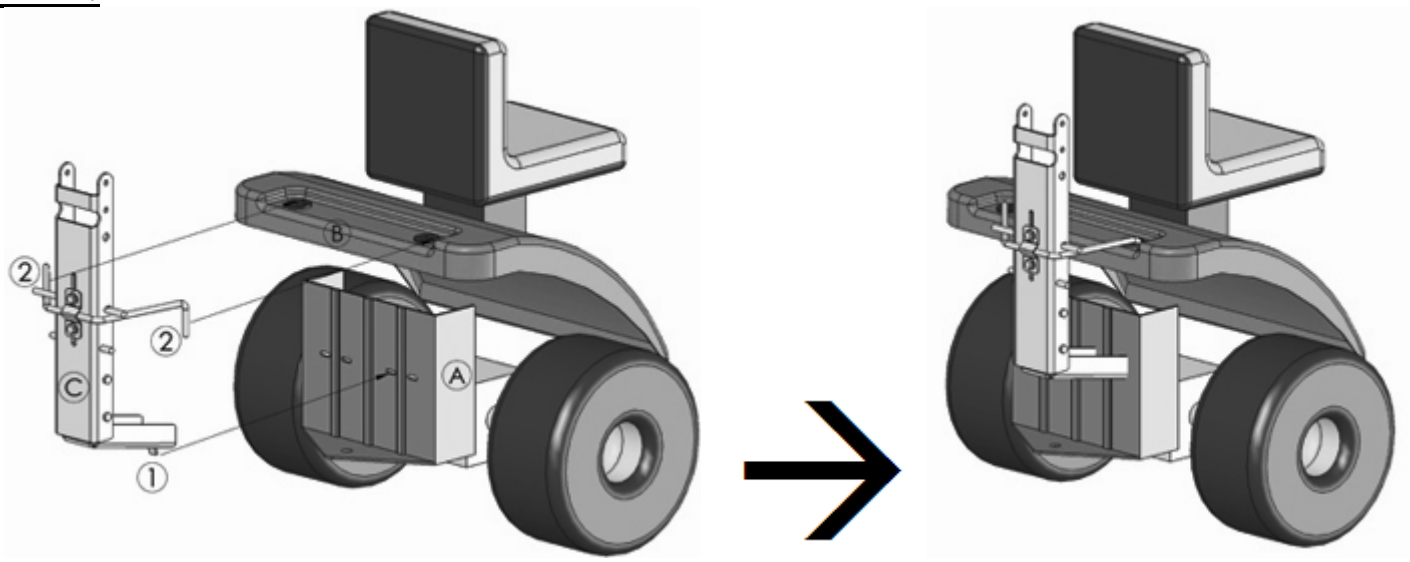

- First, place the small tab at the bottom of the mount assembly (C) into the second slot from the right on the rear plate (A) of the mower.
- Insert the two ends of the support wire (2) into the two small holes behind the seat (B).
- Make sure the support wire is level and fully tighten the two nylock nuts.

STEP 3:

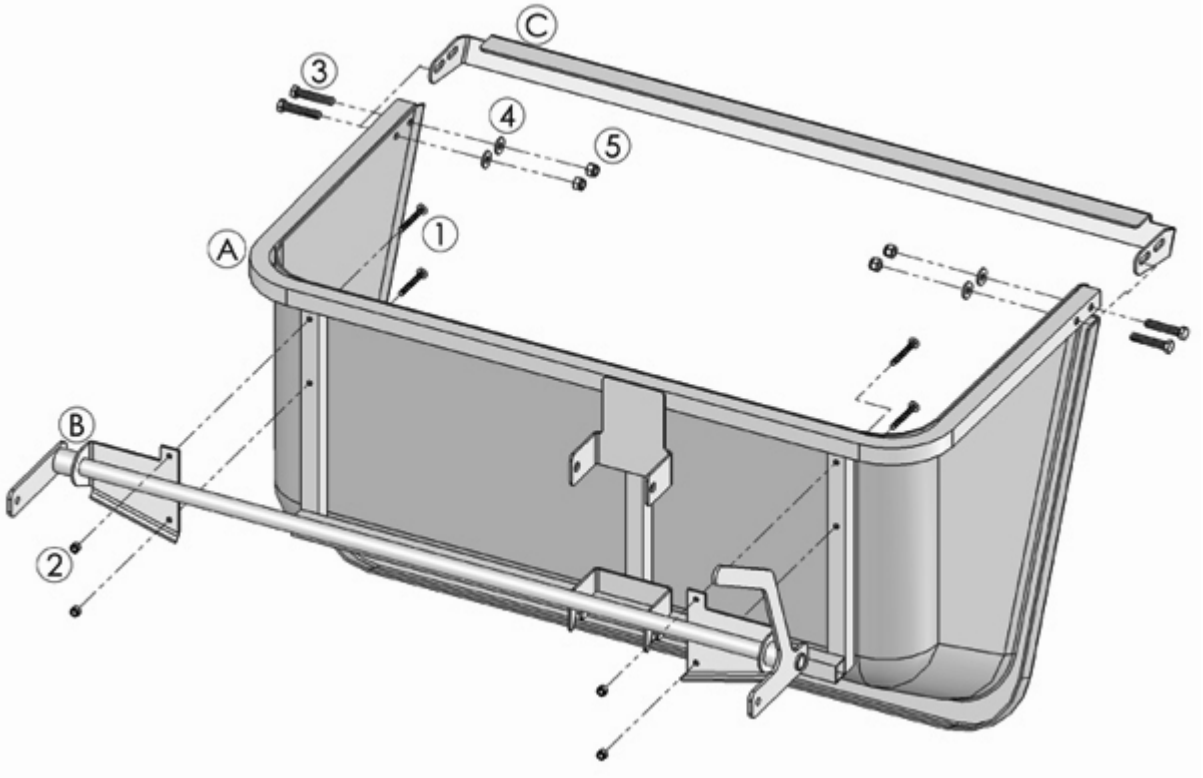

- Line up the holes on the catcher body (A) and the dump lever assembly (B).
- Insert four Phillips head truss bolts (1) thru the holes from the inside of the catcher body.
- Use four, 1/4” nylock nuts (2) to fasten bolts (1). Make sure nuts are fully tightened so there is no play with the plates of the dump lever assembly.
- Place tabs of catcher hinge assembly (C) to outside frame of (A), and match the holes on the outside.
- Insert two, 2” long, 3/8” diameter bolts (3) on each side.
- Place washers (4) over the bolts (3) on the inside of (A) and tighten with 3/8” nylock nuts (5).

STEP 4:

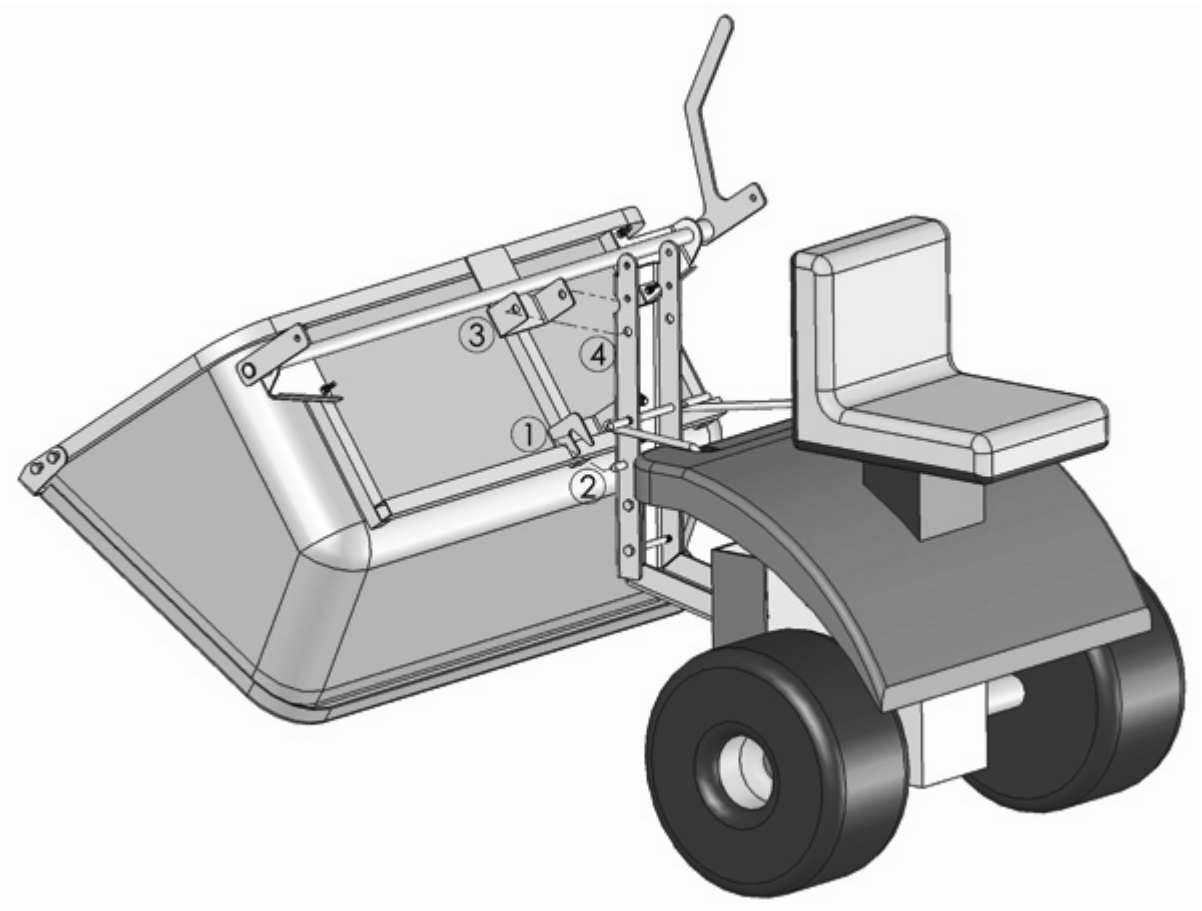

- Place the bottom slotted bracket (1) around the mount assembly and onto the rod (2) below the support wire.
- Position the top bracket (3) around the mount assembly and line up the holes.

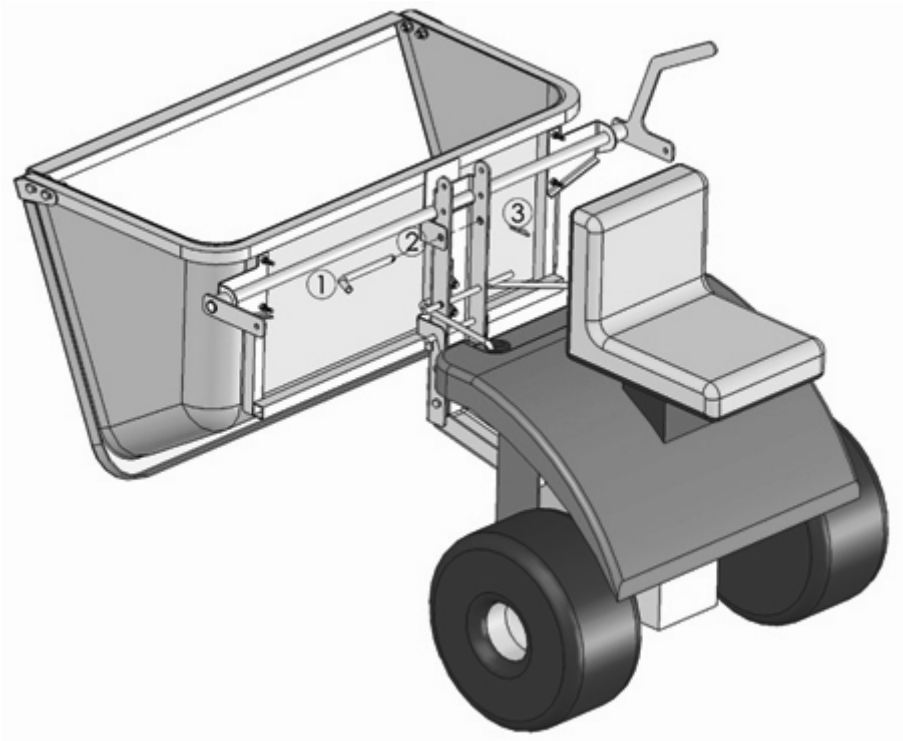

- Insert the 5” bent pin (1) through the top bracket and mount assembly (2).
- Insert the larger bridge pin (3) into the small hole in the bent pin (1).

STEP 5:

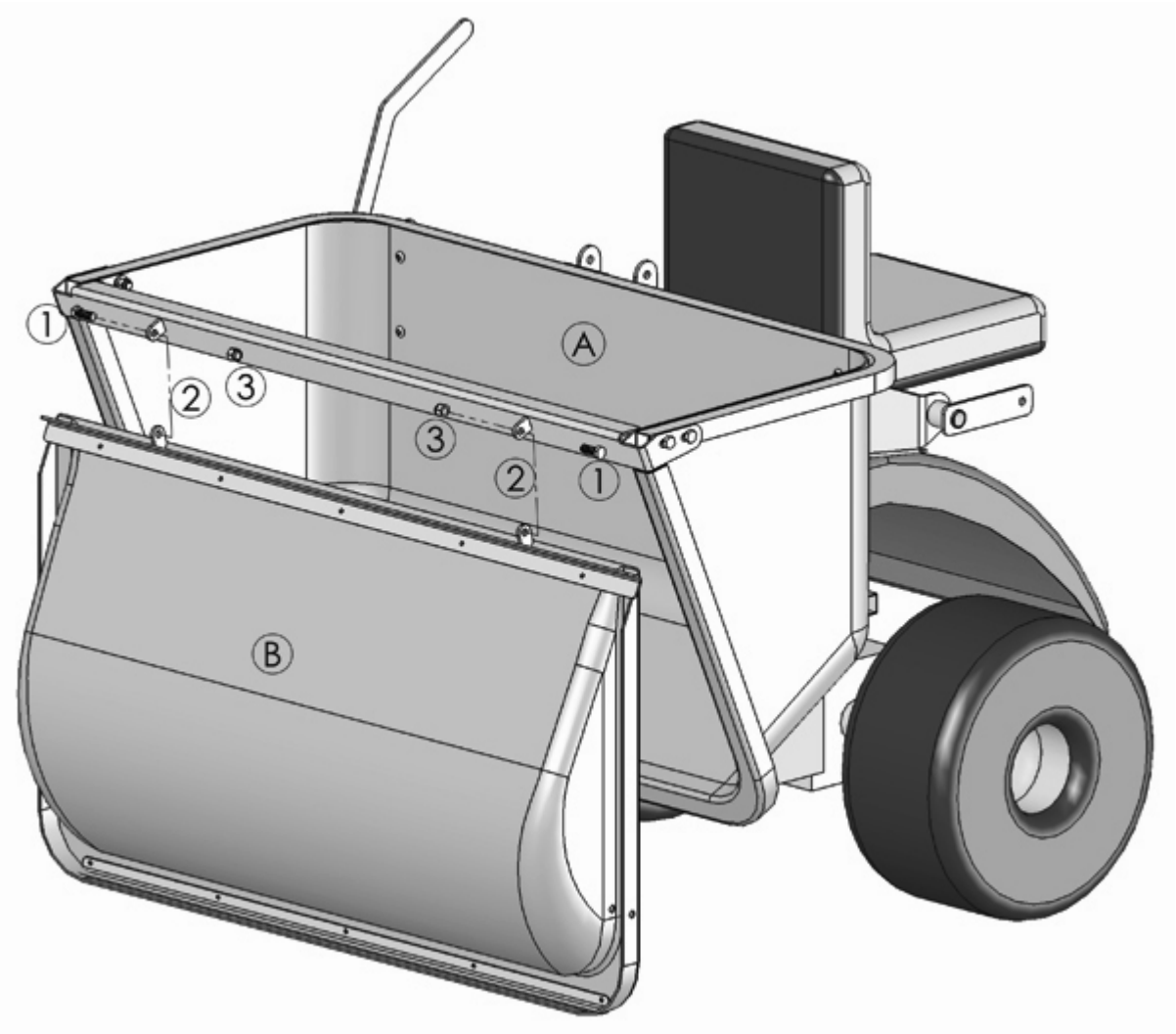

- Line up the hinges on door assembly (B), with the hinges on the catcher hinge assembly.
- Keep the hinges on (B) on the right side with the hinges on the catcher hinge assembly on the left.
- Through each set of hinges (2), insert a 1” long, 3/8” diameter bolt (1).
- Tighten each bolt with 3/8” nylock nuts (3).

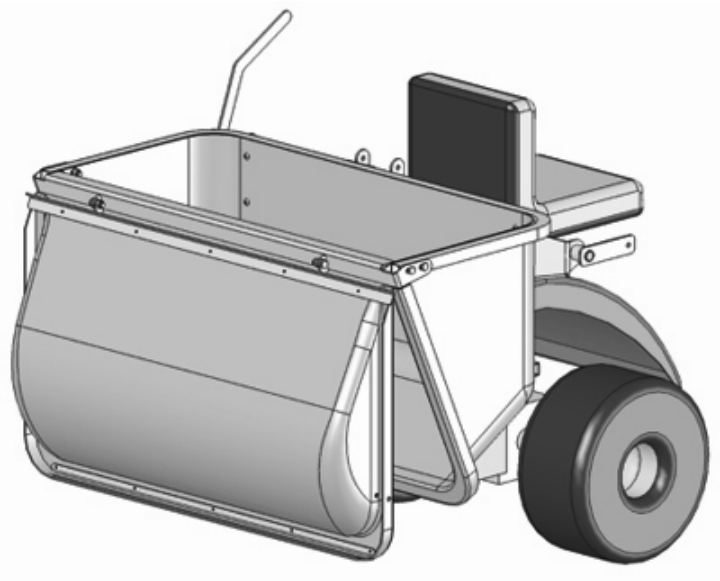

STEP 6:

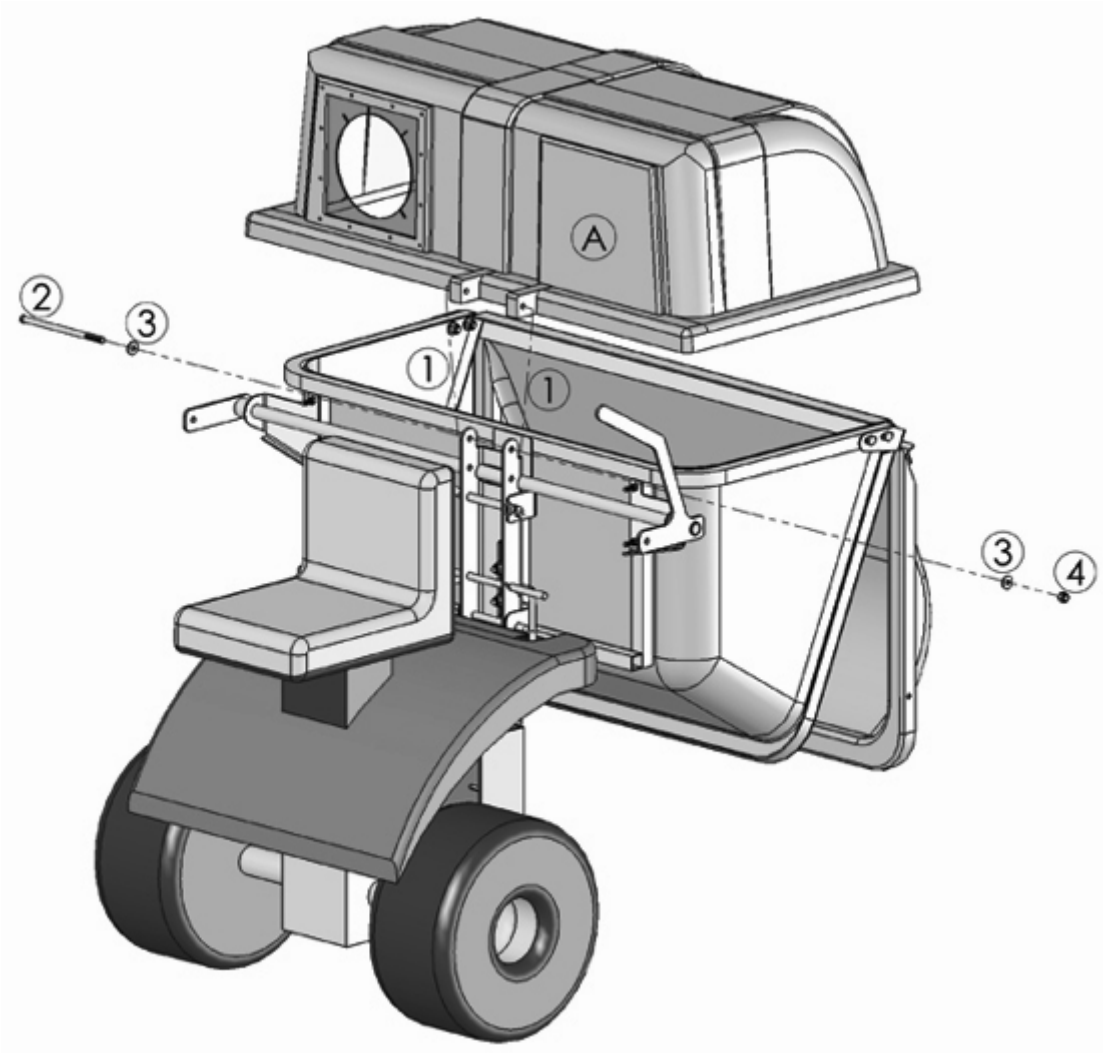

- Place the catcher hood (A) hinges around the top holes of the mount assembly (1).
- Line up the holes of the hood and the mount assembly.
- Place a washer (3) and a 7” long, 3/8” diameter bolt (2) thru holes of the hood hinges and mount assembly.
- Place a washer (3) at the other end of the bolt and tighten with a 3/8” nylock nut (4).

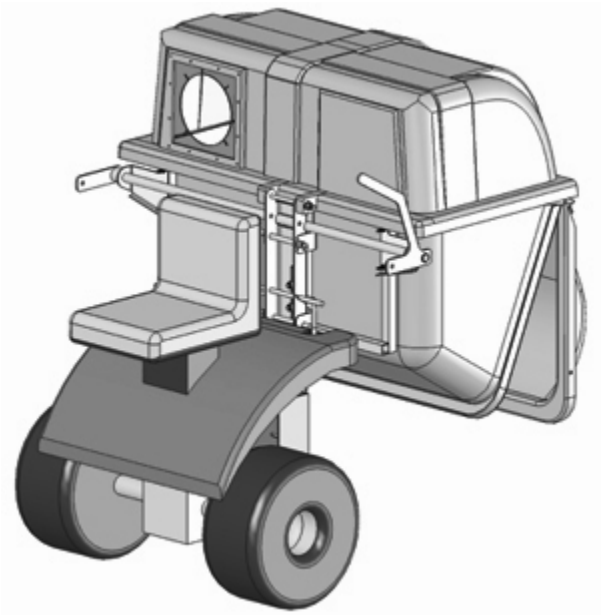

STEP 7:

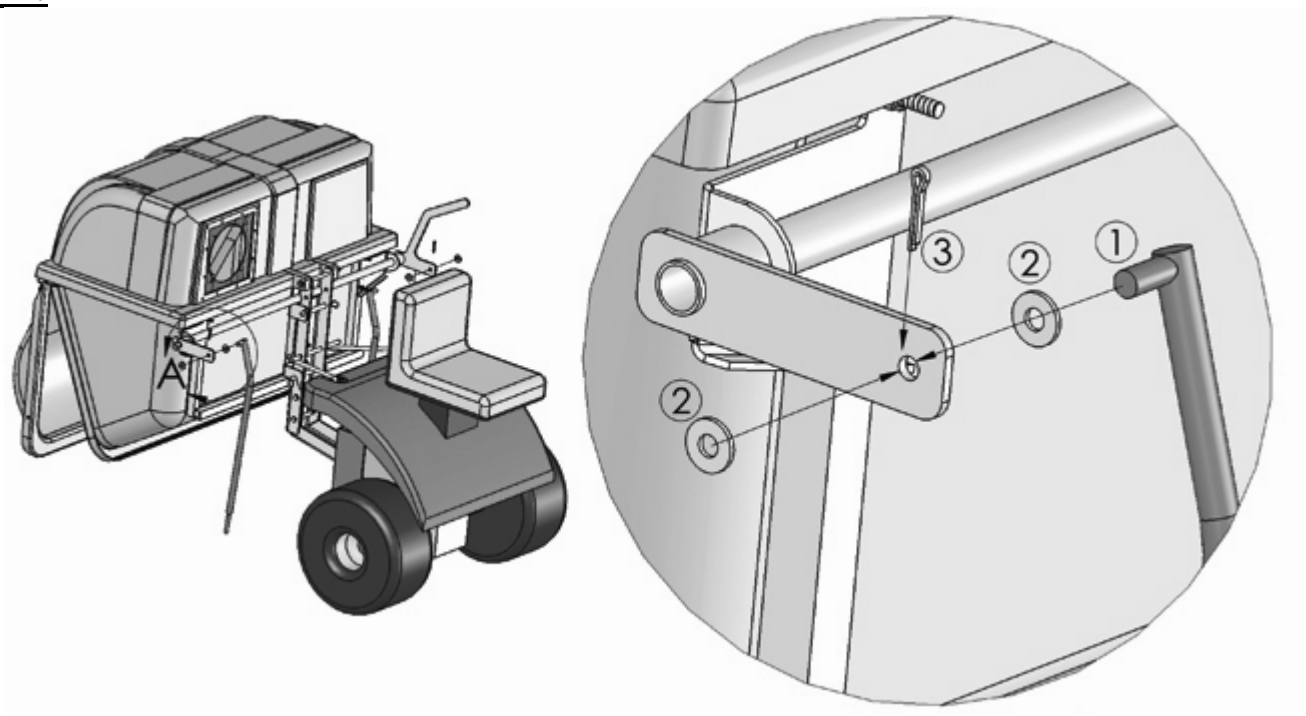

- Insert hinge rod right (1) through washer (2) and hole in dump lever assembly. The rod should bend towards the catcher door.
- On the opposite side, place a washer (2) over the end of the hinge rod.
- Insert cotter pin (3) into hole on the end of the rod.

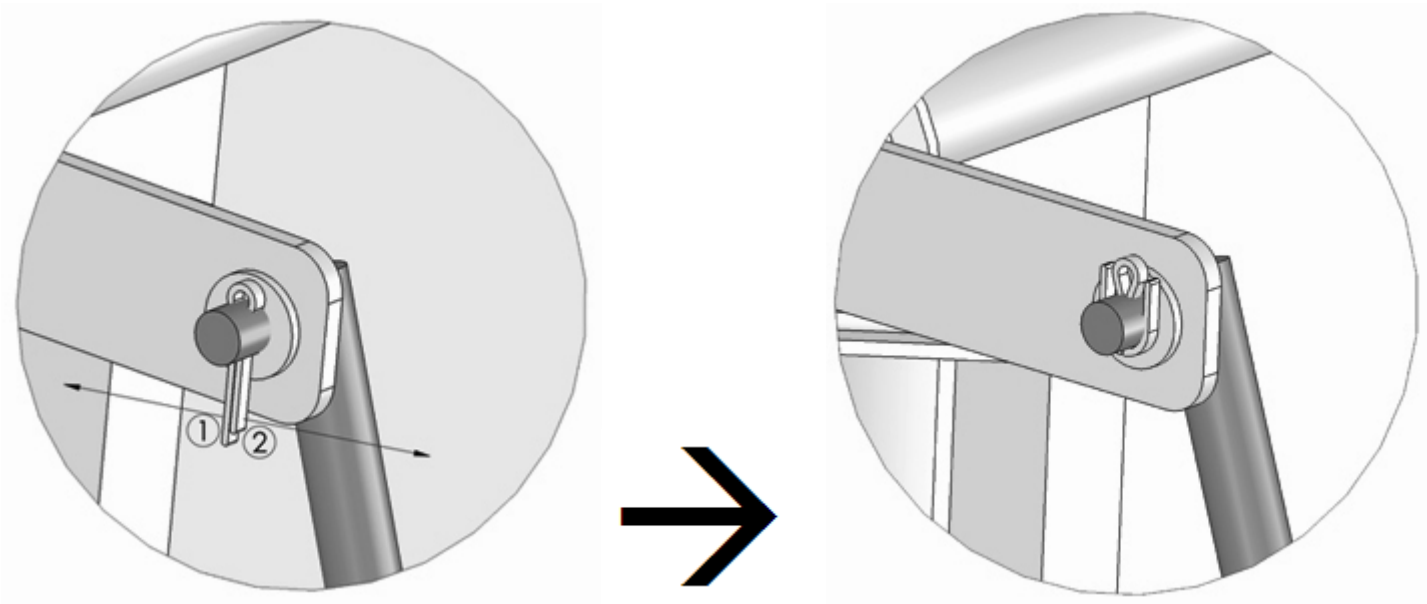

- Use pliers to bend out the ends of the cotter pin around the end of the rod.
- ***Repeat the instructions above for the opposite side of the dump lever assembly.***

STEP 8:

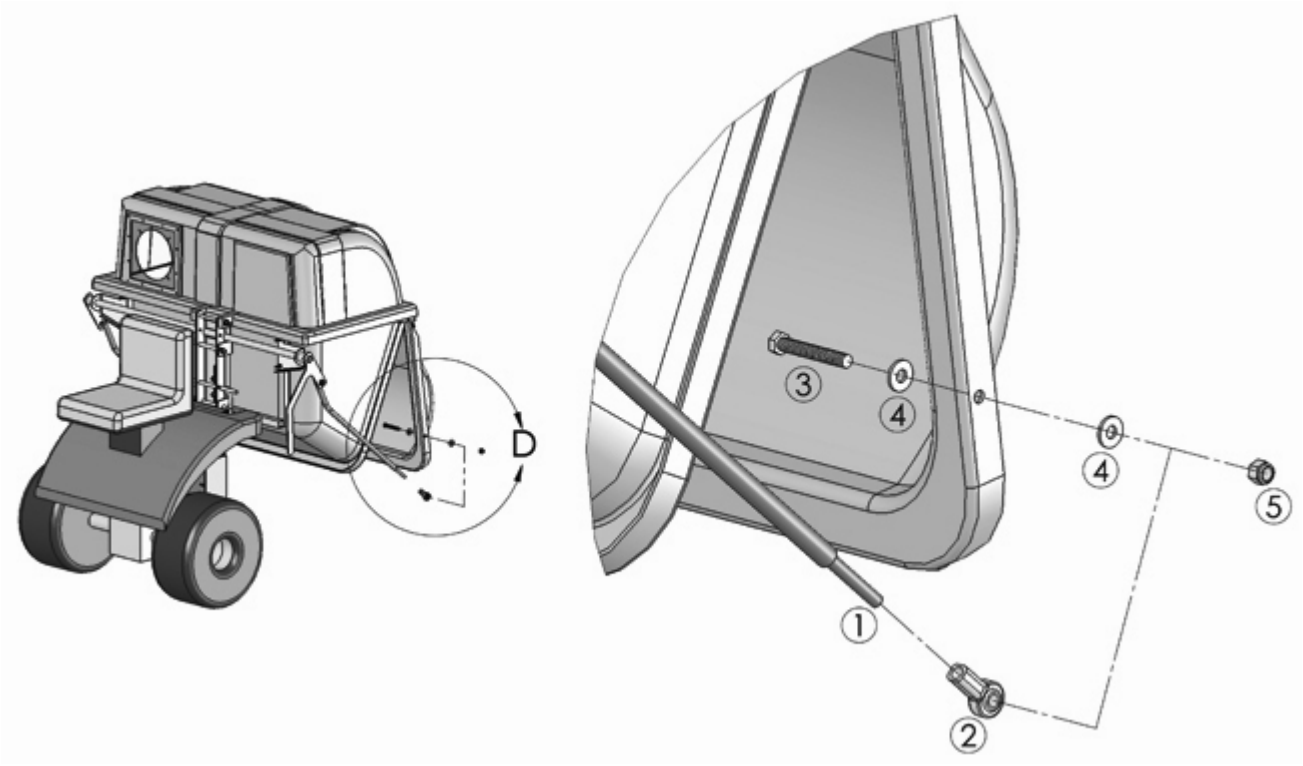

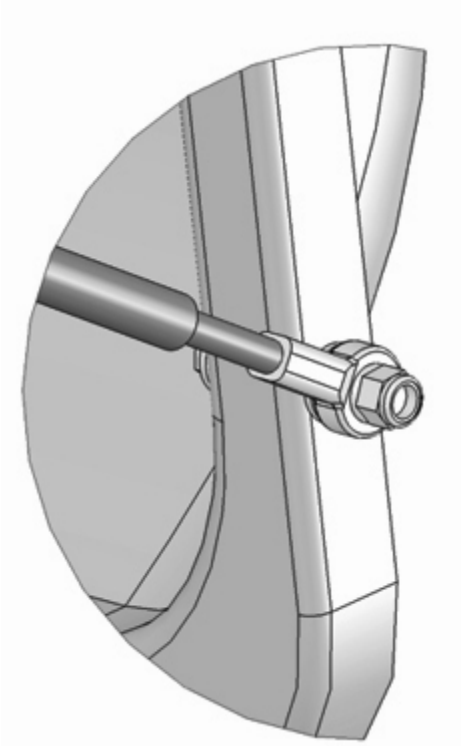

- Screw rod end (2) onto the straight end of the hinge rod (1). Does not necessarily need to be tight. Adjustments may be required.
- Insert a 2½" long, 3/8" diameter bolt (3) thru a washer (4) and catcher door from the inside.
- Place a washer (4), and rod end (2) on the outside of the door over the hole and insert the bolt (3) thru the holes.
- Tighten with a 3/8" nylock nut (5).
- ***Repeat the instructions above for the opposite side of the catcher door.***

NOTE: Extra washers are provided to space the rod ends further from the door if necessary.

Rod ends may need adjustment by either screwing or unscrewing to change the overall length of the rod. This is required for good closure of the catcher door to ensure a proper seal.

Dump lever handle may need to be bent out slightly to clear mower fender when operating the dump lever.

STEP 9:

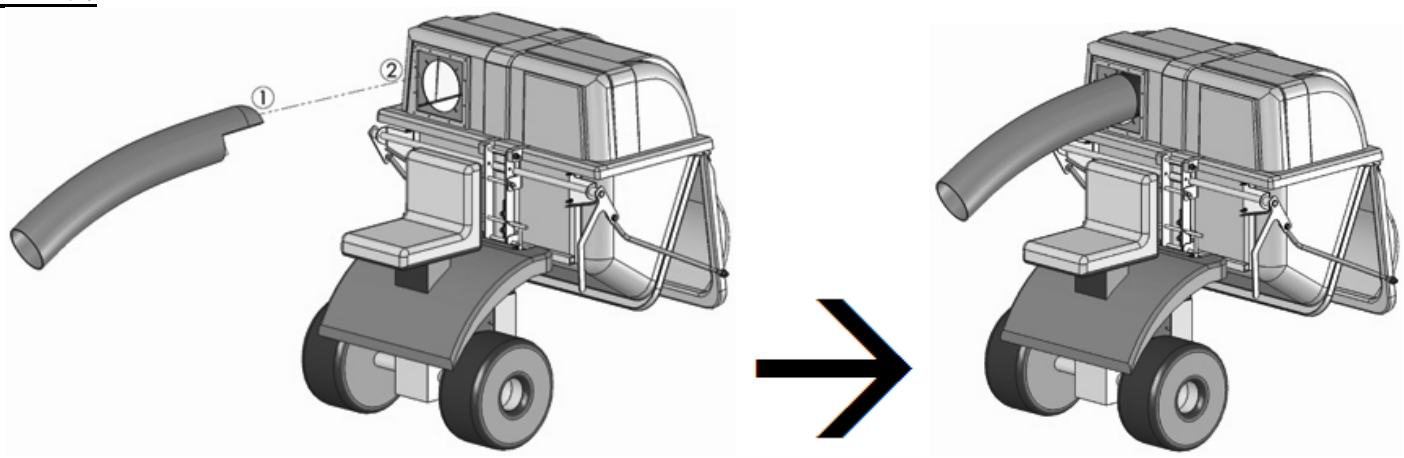

- Attach the intake (1) from the mower deck into the intake seal (2).

Proper intake provided by John Deere.

LIMITED WARRANTY

We warrant each new Dump N Go catcher to be free from manufacturing defects in normal service for a period of 12 months from the purchase date.

Our obligation under this warranty is expressly limited, at our option, to the replacement or repair at PROTERO Inc. (New Hope, MN), or at a service facility designated by us, of such part or parts as inspected shall disclose to have been defective. This warranty does not apply to defects caused by improper installation, damage, or unreasonable use (including failure to provide reasonable and necessary maintenance).

All warranty claims must be pre-approved. We shall not be liable for any claims or fees not pre-approved. Replacement parts will be sent no charge via UPS Ground. Expedited shipping services are available for an additional fee.

This warranty is void should the product be repaired or modified in any way not authorized by PROTERO Inc.